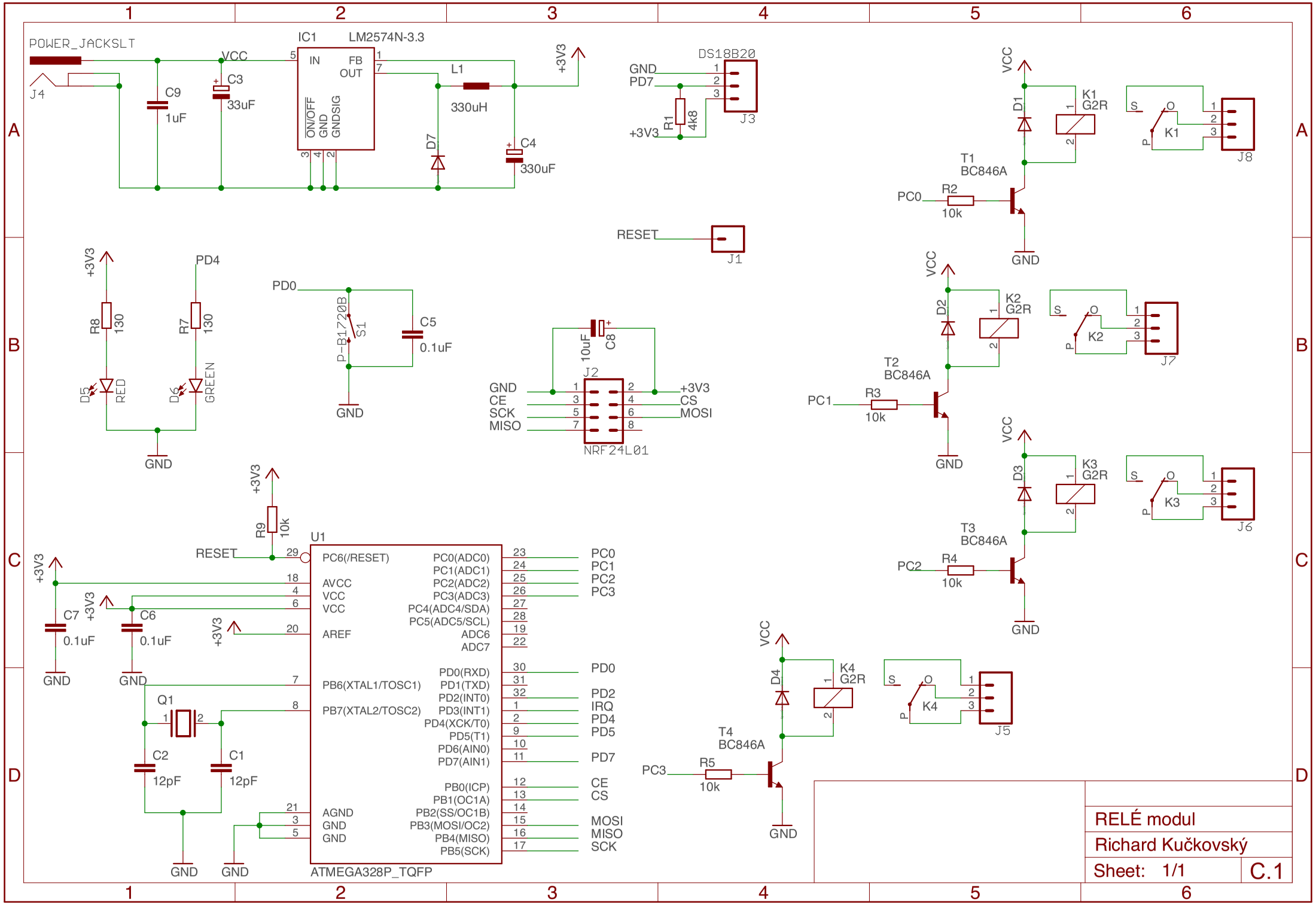
POWER_JACKSLT
J4
VCC
C9
1uF
C3
33uF
IC1
LM2574N-3.3
IN
FB
OUT
ON/OFF
GND
GNDSIG
L1
330uH
D7
C4
330uF
+3V3
DS18B20
GND
PD7
+3V3
R1
4k8
J3
RESET
J1
+3V3
R8
130
D5
RED
PD4
R7
130
D6
GREEN
GND
PD0
P-B1720B
S1
C5
0.1uF
GND
10uF
C8
J2
GND
CE
SCK
MISO
+3V3
CS
MOSI
NRF24L01
VCC
D1
K1
G2R
T1
BC846A
PC0
R2
10k
GND
S
O
P
K1
J8
VCC
D2
K2
G2R
T2
BC846A
PC1
R3
10k
GND
K2
J7
VCC
D3
K3
G2R
T3
BC846A
PC2
R4
10k
GND
K3
J6
+3V3
R9
10k
RESET
U1
PC6(/RESET)
AVCC
VCC
VCC
AREF
PB6(XTAL1/TOSC1)
PB7(XTAL2/TOSC2)
AGND
GND
GND
PC0(ADC0)
PC1(ADC1)
PC2(ADC2)
PC3(ADC3)
PC4(ADC4/SDA)
PC5(ADC5/SCL)
ADC6
ADC7
PD0(RXD)
PD1(TXD)
PD2(INT0)
PD3(INT1)
PD4(XCK/T0)
PD5(T1)
PD6(AIN0)
PD7(AIN1)
PB0(ICP)
PB1(OC1A)
PB2(SS/OC1B)
PB3(MOSI/OC2)
PB4(MISO)
PB5(SCK)
PC0
PC1
PC2
PC3
PD0
PD2
IRQ
PD4
PD5
PD7
CE
CS
MOSI
MISO
SCK
ATMEGA328P_TQFP
C7
0.1uF
C6
0.1uF
Q1
C2
12pF
C1
12pF
VCC
D4
K4
G2R
T4
BC846A
PC3
R5
10k
GND
K4
J5
RELÉ modul
Richard Kučkovský
Sheet: 1/1
C.1